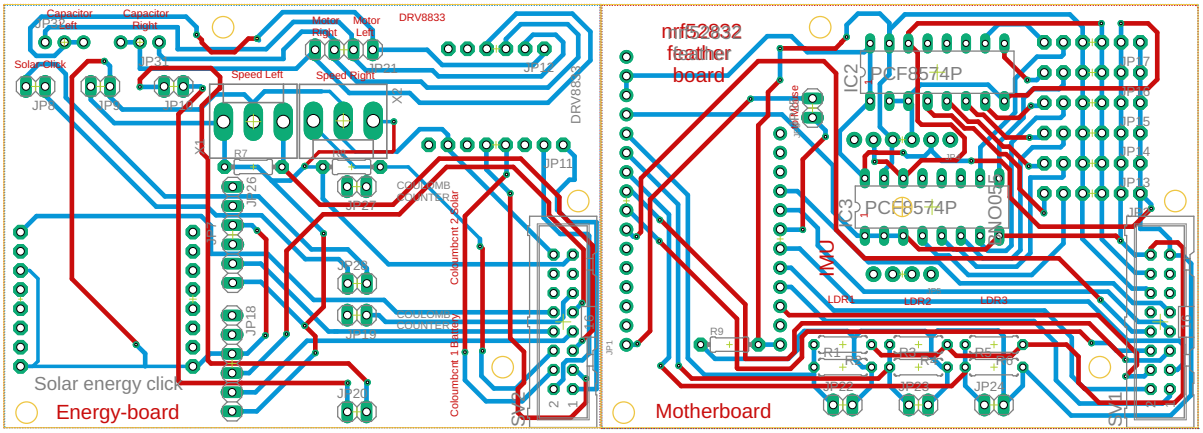

23.02.2020 23:38 C:\Users\Admin\Documents\EAGLE\projects\ITS-E_Motherboard\ITS-E.brd